MODEL
5013

OPERATING MANUAL

Design & CERTIFICATION DEKRA DIN ISO 9001 Manufacture

SERIAL No. : _____

Rev 1.5 - 22/09/99

BELT WEIGHER MANUAL

PLEASE NOTE!

Safety

This equipment is supplied by a mains voltage which can cause an electric shock injury. Before removing the circuit board from its housing, switch the instrument off, isolate it from the mains power supply and make sure that it cannot be connected inadvertently by other persons.

If the circuit board is removed from its housing, do not apply power to the instrument unless specifically instructed to do so in these instructions. When working on live equipment, exercise great care, use insulated tools and test equipment, and do not work alone.

When fitting option boards, always put the circuit boards back in the housing with the back-plate securely fastened before powering up the instrument.

When handling circuit boards, ensure that full anti-static precautions are observed.

Replace mains fuse with one of an equivalent type or rating.

Cleaning

Do not clean the instrument while the instrument is on. Harsh abrasives, solvents, scouring cleaners and alkaline cleaning solutions, such as washing soda, should not be used especially on the display window. The outside of the instrument may be wiped down with a slightly damp clean cloth (lightly moistened with water only).

Under no circumstances should you attempt to wipe the inside of the instrument.

Guarantee

This product is guaranteed against faulty workmanship or defective material, for a period of 3 (three) years from date of delivery.

The manufacturer undertakes to replace without charge all defective equipment which is returned to it (transportation costs prepaid) during the period of guarantee, provided there is no evidence that the equipment has been abused or mishandled in any way.

The manufacturer reserves the right to alter any specification without notice.

CONTENTS

SPECIFICATIONS ..... Page 4
- Introduction ..... Page 4
- Features ..... Page 4
- Available options ..... Page 4
- Electrical specifications ..... Page 5
- Input amplifier ..... Page 5
- Excitation ..... Page 5
- Power supply ..... Page 5
- Other specifications ..... Page 5
- Programmable settings ..... Page 5

INSTALLATION ..... Page 6
- Panel cutout ..... Page 6
- Fastening ..... Page 6
- Display & keypad during normal display mode ..... Page 6
- Display & keypad during programming mode ..... Page 6

CONNECTION DIAGRAM & LINKS ..... Page 7
BASIC BELT WEIGHER THEORY ..... Page 7

SETUP & CONFIGURATION ..... Page 8
- Introduction ..... Page 8
- Parameter ranges ..... Page 8
- Setup weigh section mass ..... Page 8
- Setup belt speed ..... Page 9
- Setup weigh section length ..... Page 9
- Setup totaliser ..... Page 10
- Setup pulse output for remote totalisation ..... Page 10
- Test run ..... Page 10

PROGRAMMING CHART ..... Page 11
EXPLANATION OF DISPLAY CODES ..... Page 12
PROGRAMMING EXAMPLE ..... Page 13
ASCIIBUS PROTOCOL ..... Page 13

OPTIONAL FEATURES ..... Page 14
- 3001-P 2 alarms (solid state relays) ..... Page 14
- 3001-M 2 alarms (electro-mech relays) ..... Page 14
- 3002 RS 485 communications ..... Page 14
- 3003 0-20/4-20mA analog output ..... Page 14
- 3004-P 1 alarm (solid state relays) ..... Page 14
- 3004-M 1 alarm (electro-mech relays) ..... Page 14
- 3007 0-10V analog output ..... Page 14
- 3009 Parallel BCD output ..... Page 14
- 3012 Rate peak / valley hold ..... Page 15
- 3013 RS 232 communications ..... Page 15
- 3017-P 3 alarms (solid state relays) ..... Page 15
- 3018-P 4 alarms (solid state relays) ..... Page 15
- 3023 Pulse output (remote totaliser) ..... Page 15
- Diagram “P” ..... Page 15
- Diagram “M” ..... Page 15

Documentation control ..... Page 16
Declaration of conformity ..... Page 16
User notes & settings ..... Page 16

SPECIFICATIONS

Introduction

The Model 5013 is a self-contained, easy-to-use indicator for belt weighing applications. All the features of more expensive systems are included in one indicator. The indicator features a full 5½ digit LED display (-199999 to 199999). Inputs to the instrument include load cell input, encoder input & totaliser reset input. Included is excitation for load cells and a 18 - 24V DC supply for the shaft encoder. The stable bridge excitation output voltage includes sense feedback to compensate for line variations. The precision front end circuitry ensures high stability and accuracy for millivolt input from the load cells in the weigh belt system.

Options include analog output for external feed rate control, up to four alarms, pulse output for external totalised weight, RS 232 / RS 485 communications and many others. A feature of this programmable indicator / controller is the calibration method. Pre-calibrated ranges can be allocated zero and full scale values and these can be adjusted on site to allow for deadweight / back-balance offset and single point span calibration (test weight trim). The instrument meets European Community EMC directive 89/336/EEC and Low Voltage directive 73/23/EEC.

Features

- DIN 48 x 96 enclosure, 147mm depth (170mm with power cable guard)
- -199999 to 199999 counts display
- 14.2mm high bright red LED display
- Low cost - high performance design
- Touch button ranging & setpoint adjustment
- 10 V (-5V to +5V) loadcell excitation with sense feedback included as standard
- Excitation power for up to three loadcells standard
- 18 - 24 V power supply for shaft encoders included as standard
- Flow rate analog output option with programmable zero & span
- RS 232 / RS 485 communications option

Options Available

See detailed description / operation at back of manual

3001-P	Dual setpoints / alarms (solid state relays)
3001-M	Dual setpoints / alarms (electro-mechanical relays)
3002	RS 485 communications (Digibus or Asciibus protocol)
3003	0 - 20 mA / 4 - 20 mA analog output
3004-P	1 setpoint / alarm (solid state relay)
3004-M	1 setpoint / alarm (electro-mechanical relay)
3007	0 - 10V analog output
3009	Parallel BCD output
3012	Flow rate Peak / Valley Hold function
3013	RS 232 communications (Digibus or Asciibus protocol)
3017-P	3 setpoint / alarms (solid state relays)
3018-P	4 setpoints / alarms (solid state relays)
3020	Ultra bright RED display
3023	Pulse output for remote totalisation

Note : Option 3009 cannot be ordered with any alarm options.

Electrical Specifications

Accuracy & linearity	: 0.05% of full scale, or 1 count
Internal resolution	: 20000 counts (bi-polar)
Temperature.drift	: 0.1µV / °C typically
Settling time / conversion time	: 0.15 seconds approx.
Operating temp. range	: -10 to +50°C
Storage temp. range	: -40 to +80°C
Humidity	: < 85% non-condensing
Warm-up time	: 10 minutes
Electromechanical relays	: 250V AC, 30V DC, 2A, PF=1
Solid state relays	: 400 V AC/DC, 0.5A, PF=1
Analog output accuracy	: 0.1% of full scale
Current analog output load	: 500 Ω maximum
Voltage analog output load	: 1 kΩ minimum
Memory retention	: Full non-volatile operation
Option 3006 isolation rating	: 1500 V
Declaration of conformity	: See last page

Input Amplifier

Input impedance	: 2 MΩ (differential)
Max. C.M. voltage	: ± 2V
C.M.R. ratio	: 86 dB typical
Noise	: < 0.5µV p-p

Excitation

Sense feedback	: Yes
Voltage	: 10 volts, ± 5V bipolar
Temp. coefficient	: 10 ppm typical
Max. number of LC's	: 3 (three)

Power Supply

Typical power consumption is 8VA, as it depends on the number of load cells used.

STANDARD :
95V-265V AC/DC isolated power supply, fused (2A picofuse).

Other Specifications

DIN 48 x 96 housing, 147mm depth
Industrial strength single piece housing

Flame retardant ABS plastic UL94 V-0 housing
Flame retardant circuit board material UL94 V-0

Front facia : IP53 rating for front facia
Front facia : IP65 if optional panel seal added

Programmable Settings

Zero & full scale setting	: -199999 to 199999
Decimal point	: Adjustable on all digits
Load cell input filtering range	: 0.0 to 10.0 seconds
Input sensitivity	: 1, 2, 3 or 10 mV/V (Note 1)
*Analog output zero	: -199999 to 199999
*Analog output span	: -199999 to 199999
*Alarm values	: -199999 to 199999
*Alarm hysteresis	: 0 to 255 (default 1)
*Alarm delay	: 0 to 255 seconds (default 0)
*Alarm relay settings	: Select HI or LO alarm
*Alarm relay state	: Select NO or NC
*Unit addressing	: 1 to 127 (default 0 - for factory use only)
*RS232 / RS485 baud	: 2400, 4800, 9600, 19200

NOTE (1) : These 4 sensitivities cover the vast majority of applications. For specialised requirements, please consult the factory.

* indicates option

INSTALLATION

Panel Cutout

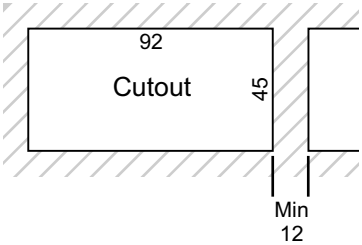

Fastening

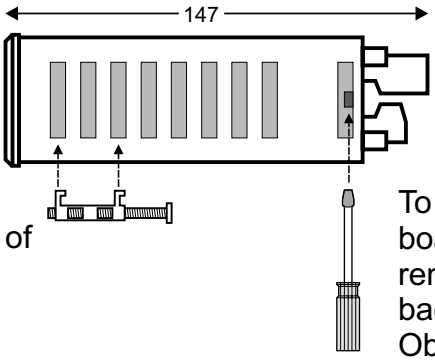

The supplied fastening clips may be fitted on **the side** or the **top / bottom** of the housing. Ensure that the clip & screw is mounted as shown here.

Caution : Do not overtighen the screws.

To gain access to the circuit boards, switch power off and remove terminals from the back of the housing. Observe safety precautions. Use a screwdriver to clip the back-plate off.

Display & Keypad

During normal display mode

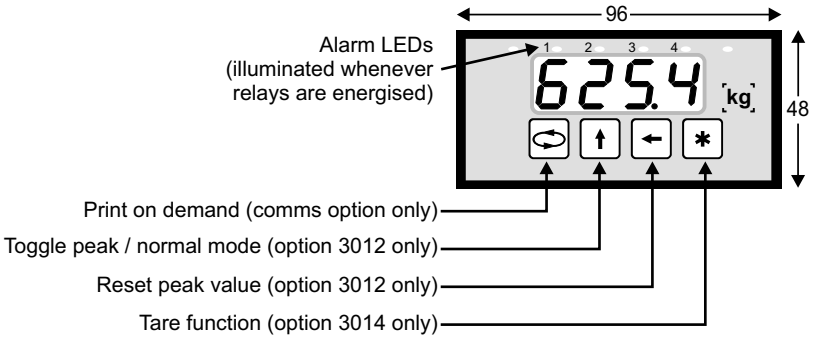

Display & Keypad

During programming mode

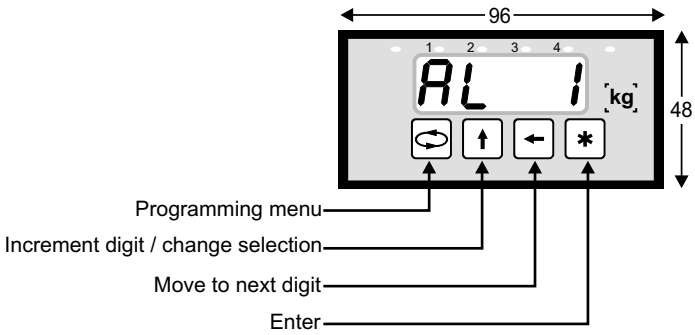

All dimensions in mm

CONNECTION DIAGRAM & LINKS

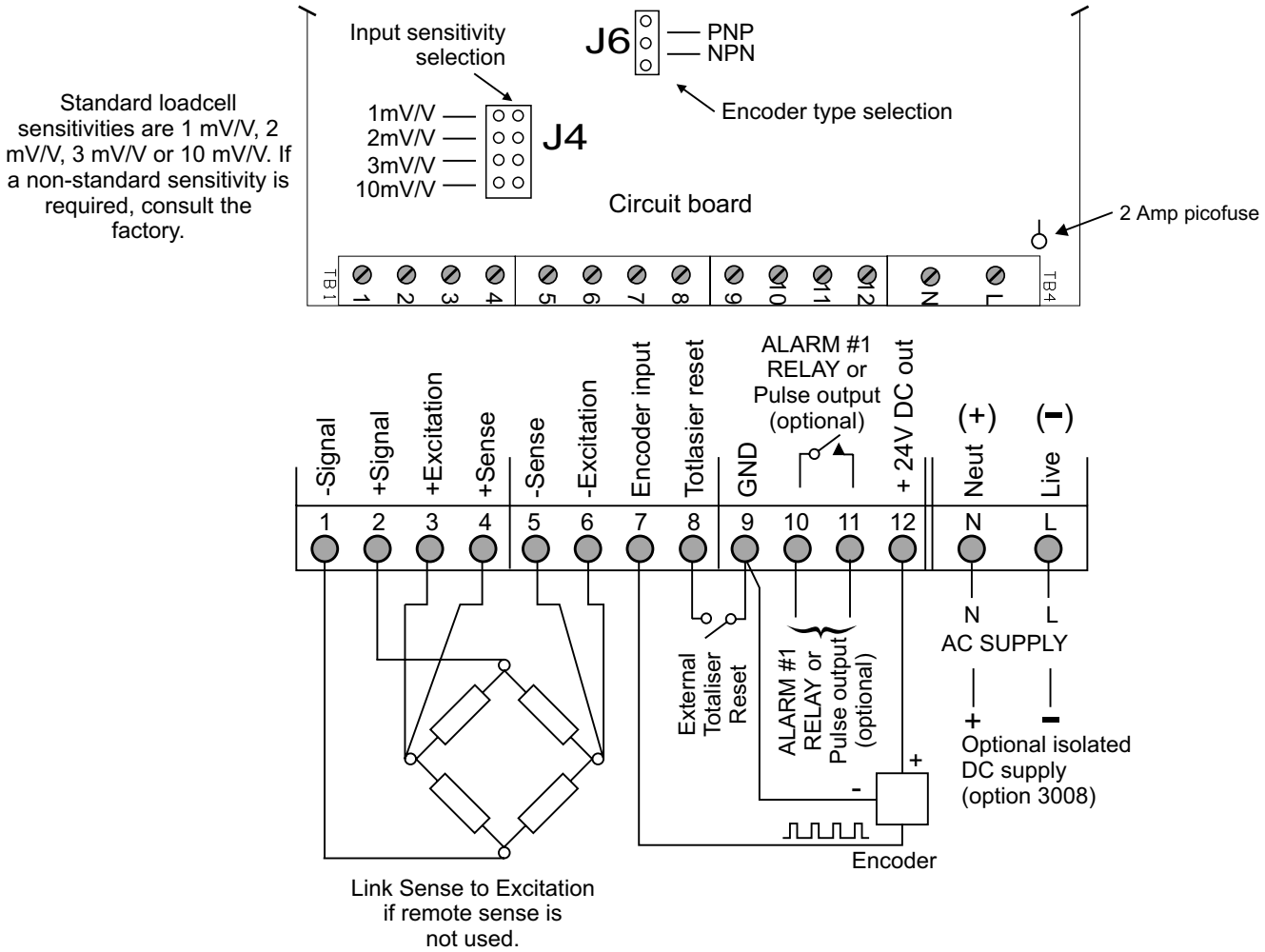

BASIC WEIGHBELT THEORY

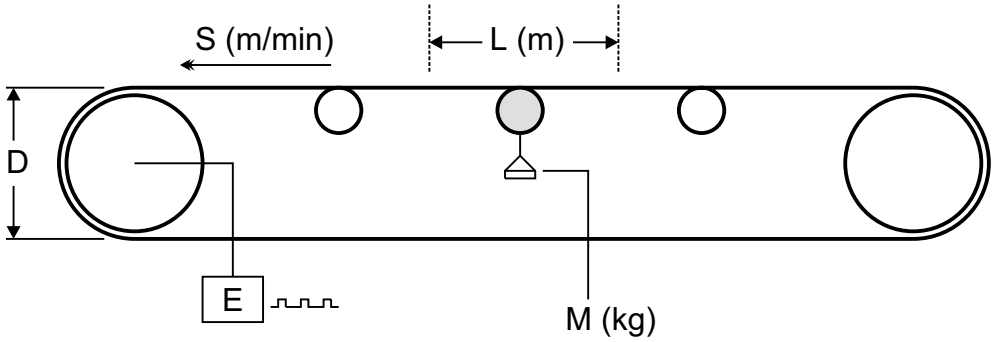

$$\text{FLOW RATE} = \frac{M \times S}{L} \quad \text{kg / min}$$

where M = net mass in kilograms
S = belt speed in metres / minutes
L = weighsection in metres

Example : M = 100.0 kg, S = 1.000 m/min, L = 1.000 m

Then :

$$\text{Flow Rate} = \frac{M \times S}{L} = \frac{100.0 \times 1.000}{1.000} = 100 \text{ kg / min}$$

SETUP & CONFIGURATION

Introduction

Various parameters have to be entered into the instrument. The procedures below should be followed for easy configuration of your belt weighing system. Refer to the menu / programming chart on the following pages to assist you when entering data.

Parameter Ranges

The following parameter limits should be noted. However, it is highly unlikely that these parameter will be exceeded during normal operation of the belt weigher.

Load cell	= 9.999 kg ... 9999 kg (limit entry to 4 digits only)
Pulley circumference	= 0.001 ... 50.000 metres
Encoder pulses	= 1 ... 5000 per revolution
Input frequency from encoder	= 1 ... 13000 Hz
Belt speed	= 1.00 ... 800.00 metres / min
Flow rate	= Display limitation of 199999 counts
Maximum averaging time	= 3 hours for both deadweight and load calibration

Setup

Weighsection Mass

The belt weigher is field configured / calibrated by selecting one of the factory set internal ranges of 1mV/V, 2mV/V, 3mV/V or 10mV/V, and entering a zero and full scale value to it (pre-calibration). Once the load cell system is set up the deadweight / back-balance of the belt can be offset and the span trimmed with test weights if required. Proceed as follows:

- ❒ Select correct load cell/s to suit system or check existing load cell/s specifications.
- ❒ Calculate maximum mass and determine sensitivity.
  Example : 1 x 60 kg single point load cell 2 mV/V. Therefore span = 60kg
  Example: 2 x 30 kg beam load cells 2 mV/V. Therefore span = 60 kg
- ❒ Select J4 input on the circuit board to required sensitivity, i.e. 2 mV/V.
- ❒ Go through menu setup to "DISP", which is the first menu item. Select "LC" to display load cell value.
- ❒ Go through the setup menu to "CAL" sub-menu. When entering data, observe the parameter ranges mentioned above i.e. only enter load cell zero, full scale and decimal point of between 9.999 kg to 9999 kg (not more than 4 digits).
  - Select load cell sensitivity e.g. " 2 " for 2mV/V
  - Select decimal point "LC.dp" e.g. oo.oo
  - Select load cell zero value "ZERO" e.g. 00.00 kg
  - Select load cell full-scale value "LC.FS" e.g. 60.00 kg
  - Select digital averaging "L.Filt" e.g. value of 5
  - Select display increment "incr" e.g. 0
- ❒ With belt weigher running, go though setup menu to "TARE". Press enter. With "TARE" flashing on the display, run belt for at least one revolution, then press enter. This will average the zero reading and tare off the weigh-section. Maximum averaging time allowed is 3 hours.
- ❒ If test weights or calibrating chain available, place on weigh-section or belt and go through the setup menu to "LOAD". Enter actual test weight value. Press enter. "LOAD" will flash on the display. This will average the load. Press enter when load is sufficiently averaged. Maximum averaging time allowed is 3 hours.
  NOTE : By automatic taring and test weight trim, the DPM will alter the manually entered "ZERO" and "LC FS" values in the "CAL" menu automatically. Do not amend these values.

Setup — Belt Speed

- ❒ Measure pulley diameter including belt thickness top and bottom in mm. Calculate circumference in metres to three decimal places:
  Circumference = Diameter (mm) x 0.003142
- ❒ Select a suitable shaft encoder to give at least 6000 impulses per minute at full belt speed.
  Examples : Shaft rotation 10RPM = minimum 600 impulses / rev required.
  Shaft rotation 60RPM = minimum 100 impulses / rev required.
- ❒ On the circuit board, choose link "N" for NPN type encoders, or "P" for PNP type encoders. Factory default is NPN.
- ❒ Go through setup menu to "BELT"
  - Enter circumference at calculated above "CIRC" : e.g. 1.000 metres
  - Enter encoder impulse / revolution "ENC" : e.g. 600 impulses / revolution
  - Select frequency filtering "F.Filt" : e.g. 0.5 seconds
- ❒ Go through setup menu to "DISP", and select "SPED". With the belt weigher running the reading should be correct in metres / min. You can use tape measure, chalk mark and stopwatch to verify.

Setup — Weighsection Length

- ❒ Measure weighsection in mm.

Examples: a) One roller on loadcell/s.

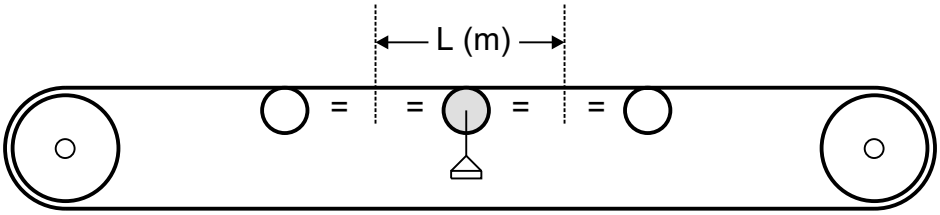

❒ b) Two rollers on loadcell/s.

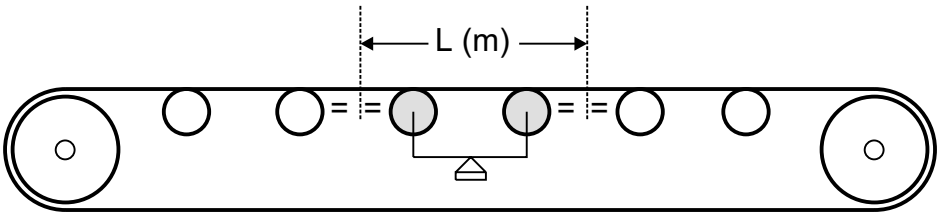

❒ c) Three rollers on loadcell/s.

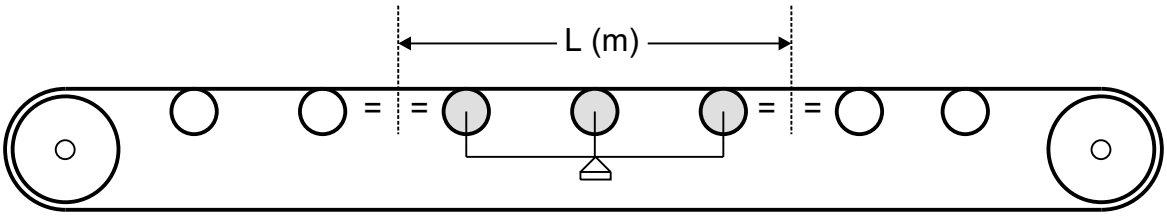

❒ d) Complete small conveyer on load cell/s.

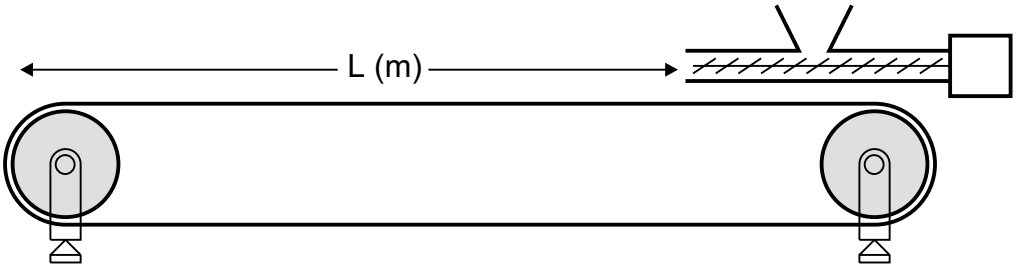

- ❒ Go through setup menu to "BELT", and under "LENG", enter the weighsection length in metres.

- Select flow rate units by selecting from the menu kg/min "HG.IN", or kg/hour "HG.Hr" or tons/hour "t .hr".
- Return to the beginning of the menu system to display "DISP" and select "RATE". With the belt weigher running with the material on the belt, the indicator should read the correct flow rate in the units selected (kg/min, kg/hr, tons/hour).

Setup — Totaliser

- Flow rate is integrated to give totalised weight.
- Two pieces of information need to be entered for the totaliser to total correctly, the integrating factor "FACt" and decimal point "t .dp".
- The factor depends on the units selected for flow rate and the desired units for the totaliser. Examples are given below:

Flow Rate Units	Desired Totalised Units	Factor "FACt"	Decimal point
kg/min	kg (no decimal "xxxxxx kg")	6.0000	None
kg/min	lbs (no decimal "xxxxxx lbs")	13.2276	None
kg/min	tons (no dec. "xxxxxx tons")	0.0600	None
kg/min	tons (1 dec. "xxxxx.x tons")	0.6000	1 decimal
kg/min	tons (2 dec. "xxxx.xx tons")	6.0000	2 decimals
kg/hour	kg (no decimal "xxxxxx kg")	1.0000	None
kg/hour	kg (1 decimal "xxxxx.x kg")	10.0000	1 decimal
kg/hour	tons (no dec. "xxxxxx tons")	0.001	None
tons/hour	tons (no dec. "xxxxxx tons")	1.0000	None
tons/hour	tons (1 dec. "xxxxx.x tons")	10.0000	1 decimal

Setup — Pulse Output For Remote Totalisation

- This is an optional feature Option 3023. If this option was ordered, then refer to the Options Section near the back of this manual.

Test Run

- A test run is performed to fine tune the system for accuracy. Initially, the error in the flow rate and totalised value is normally attributed to the weighsection length not being accurate and this value needs to be adjusted in the indicator.
- If during a test run the flowrate and/or totalised amount is too high, say 2% to high, then the weighsection length needs to be increased by the same percentage e.g. from 1.000 metres to 1.020 metres.
- If during a test run the flowrate and/or totalised amount is too low, then the weighsection length needs to be decreased by the same percentage.
- The fluctuation of the flowrate display is inherent to belt weighing systems. However, the amount of fluctuation can be user controlled by increasing or decreasing the amount of filtering "L.Filt". A higher value of "L.Filt" will smoothen our the fluctuations, and vice versa.

PROGRAMMING CHART

READ ME FIRST !

Note 1 : This programming chart is a simplified flowchart for users that have previous experience with this instrument. A programming example is available in the next few pages to assist new users in understanding this programming chart.
Note 2 : Because this instrument has many options, all possible option menus are shown in “light grey”. Options that are not ordered will not appear in the programming sequence.
Note 3 : Configuring this instrument requires two steps. (A) Select analog output (option) links (page 7). (B) Program the instrument with this chart.
Note 4 : To enter programming mode, press the menu key for a few seconds (unless the optional keypad lock has been set). Programming mode timeout is about 20 seconds. If no key is pressed for 20 seconds during programming, the instrument returns to normal display mode.

START HERE

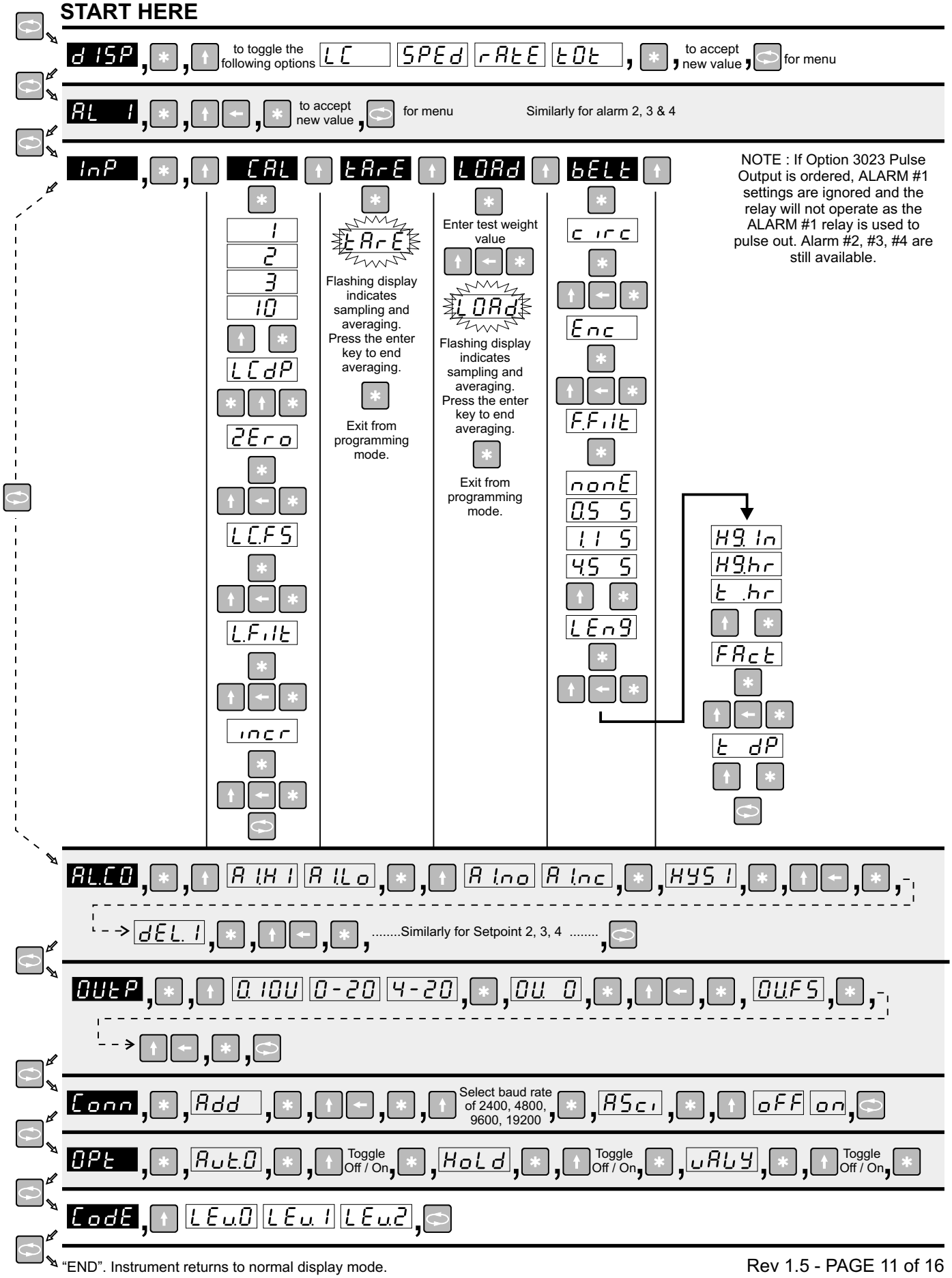

“END”. Instrument returns to normal display mode.

EXPLANATION OF DISPLAY CODES

dISP Display select menu
- **LC** Display load cell value / weight
- **SPEd** Display belt speed in metres / second
- **rAtE** Display flow rate
- **tOt** Display totalised value

8.8.8.8 Panel meter startup / reset sequence (shown on startup only)
- **oooo** Display over / under range. Input has exceeded display limits.
- **- - - -** Input saturation. Reduce input signal to reduce saturation.

AL 1 **AL 2** **AL 3** **AL 4** 1st, 2nd, 3rd, 4th setpoint value
- **AL.CO** Alarm configuration menu (shown for 1st alarm only)
- **A.1H.1** **A.1Lo** 1st alarm setpoint HIGH / LOW alarm
- **A.1no** **A.1nc** 1st alarm setpoint NO / NC contact
- **HYS 1** 1st alarm setpoint hysteresis
- **dEL.1** 1st alarm setpoint switching delay

InP Input & calibration sub-menu
- **CAL** Sub-menu for manual setting of deadweight / back-balance and load cell capacity (pre-calibration).
- **tArE** Sub-menu for field calibration of deadweight / back-balance. Press the “star” key to start process.
- **LOAd** Sub-menu for field calibration of span using test weight method. Set to test weight value and press the “star” key.
- **tArE** During field calibration of deadweight / back-balance, display flashes “tare” until the “star” key is pressed.
- **LOAd** During field calibration using test weights, display flashes “load” until the ”star” key is pressed.
- **1** **2** **3** **10** Load cell sensitivity (up to 1mV/V, up to 2mV/V, up to 3mV/V, up to 10mV/V. Remember to set jumper link J4 on the circuit board as well.
- **LCdP** Load cell (display) decimal point selection (non-floating point)
- **2Ero** Manually entered deadweight / back-balance value (enter as positive value)
- **LC.FS** Manually entered load cell full scale capacity (e.g. enter 1000 for a 1000 kg load cell system)
- **L.FilE** Load cell measurement input filter with a range of 0 to 10.0 seconds. Default is 0.0.
- **incr** Display increment. Value range is 0-100. e.g. "10" would give a dummy zero.

bELt Belt parameter menu
- **circ** Circumference of drum (belt included)
- **Enc** Encoder counts
- **F.FilE** **nonE** **0.5 S** **1.1 S** **4.5 S** Frequency filtering with values of none, 0.5 seconds, 1.1 secs, 4.5 secs.
- **LEn9** Weighsection length
- **h9.In** **h9.hr** **t .hr** Flow rate display units : kg / min, kg / hour, tons / hour
- **FACt** Totaliser factor
- **t dP** Tolaliser decimal point

OUtP Analog output menu
- **0.10U** **0-20** **4-20** Output selection (0-10V, 0-20mA, 4-20mA)
- **OU. 0** Output zero selection
- **OUFS** Output full scale selection

Conn Communications menu (RS232 / RS485)
- **Add** Unit address (default 0)
- **2400** **4800** **9600** **19.2** Available baud rate values
- **ASci** **oFF** **on** Protocol selection. On = AsciiBus. Off = DigiBus.

OPt Option menu for Tare feature and Peak / Valley Hold
- **AuE.0** Tare feature select (auto-zero / auto-tare)
- **oFF** **on** Turn the Tare feature on or off
- **HoLd** Peak / valley hold feature (min / max hold)
- **oFF** **on** Turn the peak / valley hold feature on or off
- **uALY** Peak / valley hold selector
- **oFF** **on** If “off”, peak hold mode. If “on”, valley hold mode

CodE Keypad lock menu. See “Code” function description on this page for more information.
- **LEu.0** **LEu.1** **LEu.2** Keypad lock security level. Level 0 = none, Level 1 = alarm value changes, Level 2 = full

“Code” (keypad lock) function :

The keypad lock option is used to prevent un-authorised access to the programming menu. When this option is ordered, a new sub-menu called “CODE” appears at the end of the programming sequence. See programming page 8.

Three levels of keypad lockout are available:

Level 0 - Full access to programming menu.
Level 1 - User only has access to alarm setpoint values, and a keycode is required to access the rest of the programming menu.
Level 2 - Total programming menu lockout. Keypad sequence required to enter programming mode.

If this option is ordered, the factory default is “Level 0”. The required key sequence to enter programming mode with Level 1 or 2 enabled is:
While holding down 'menu' key, press in succession the 'enter' key, then 'side arrow' key, then 'up arrow' key. Keep holding down the menu key until "- - - -" appears on the display. The indicator is now in programming mode.

PROGRAMMING EXAMPLE (Setting alarm values)

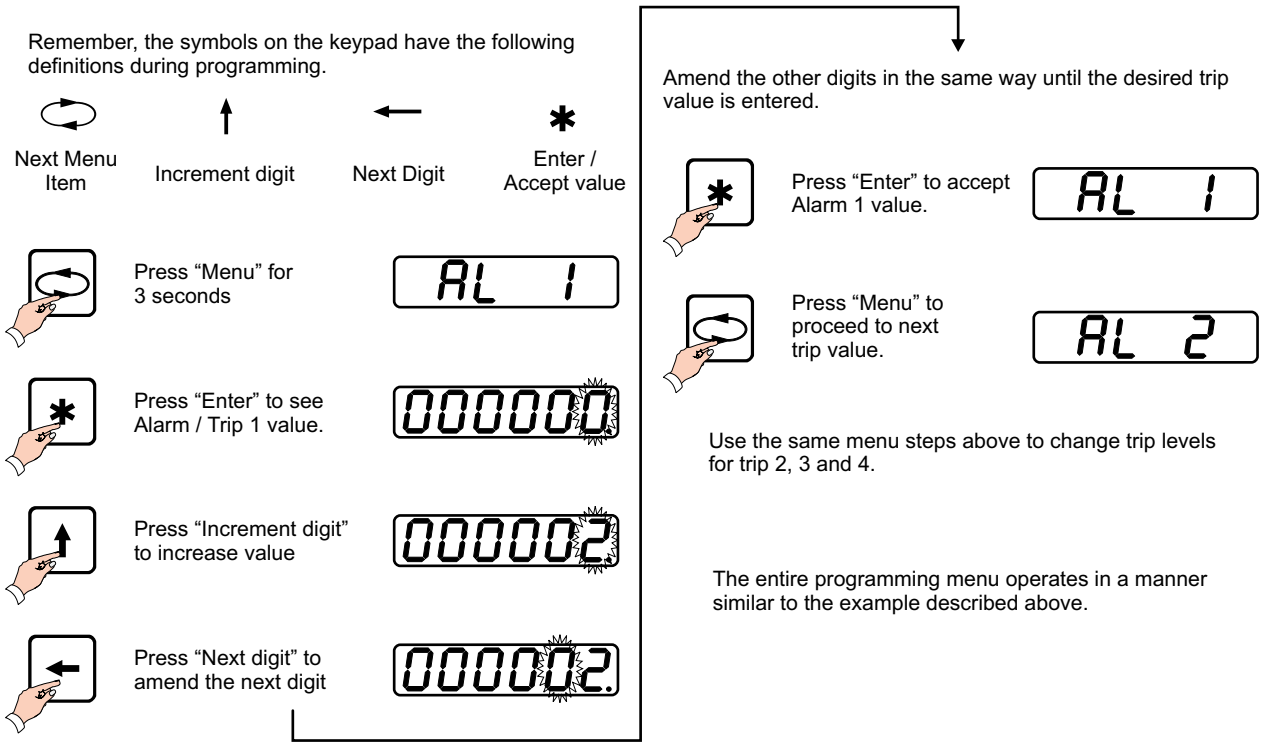

COMMUNICATIONS (Asciibus)

IGNORE THIS PAGE unless communications option has been ordered. When the RS232 (option 3013) or RS485 (option 3002) is ordered, two protocols are made available, namely ASCIIbus & DIGIbus protocols. DIGIbus is the default protocol which is used for the calibration and configuration of the instruments, and whenever the instrument is connected to master-slave systems. DIGIbus protocol is therefore used in complex bus systems, and is NOT described here. Please contact factory for the DIGIbus protocol.

ASCIIbus, which is described here, is much easier to use as it can easily interface to third party systems with very little engineering work required. It is a purely ASCII based (7 bit) protocol. The protocol is essentially designed for one way communications (instrument to PC). Under the "Conn" (connection) programming menu, ASCIIbus is enabled by selecting "ASCI" to "ON". If "OFF" is selected, the DIGIbus protocol will be active. Although designed for one way communications only, the ASCIIbus protocol contains an address. The address range is "00" to "99".

Using address "00" : If this address is selected, the instrument will only transmit data on demand by either momentarily pressing the 'menu' key, or by transmitting a byte (any ASCII character) to the DPM. This mode is useful for interfacing to printers. In addition, field ' A A ' will contain the ASCII character "blank/space". Field ' P ' will also contain the ASCII character "blank/space".
Using address "01" to "99". If any of these addresses are used, the meter continuously transmits information at approximately 5 times a second.

The data format string output from the indicator is (7 bit ASCII code is used):
Line Settings : 7 Data Bits, 1 Parity bit, Odd Parity, 1 Stop Bit.
Baud Rate : Selectable 2400, 4800, 9600, 19200.
Data Bits : Numerical ASCII characters : 0, 1, 2, 3, 4, 5, 6, 7, 8, 9
Other ASCII characters : #, blank/space, +, -, CR, LF
Protocol format is : # A A S D D D D D D D D P CR LF
where : # = indicates start of message
: A A = Instrument address. ASCII 00 to 99. 00 is default.
: S = sign (polarity) (ASCII "+" or "-").
: D = data bits (data for 8 numerals). See Note (1).
: P = decimal point position. ASCII 0 to 8.
: CR = ASCII carriage return.
: LF = ASCII line feed.

The output will follow the display reading. This means that if the peak-hold option has been ordered and activated, the communications output will peak-hold as well.

Note 1 : This protocol allows for future expansion. Therefore the first 2 digit data will contain the ASCII character "blank/space" and the last six digits will contain the display reading.

OPTIONAL FEATURES

Option 3001-P — Dual Setpoints With Solid State Relays Option

This option provides alarms on the flow rate. Solid state relays are provided as an additional board that slots into the upper slot of the panel meter housing. The upper terminals are clearly numbered 13-28 to differentiate them from the lower terminals. Note that if Option 3023 Pulse output is ordered, alarm #1 relay no longer operates as a relay, but changes function to a pulsing relay for remote totalisation. If two alarms are still required with remote totalisation, then order 3 alarm option (Option 3017-P). Solid state relays are bounce free. See diagram “P” on page 15.

Option 3001-M — Dual Setpoints With Mechanical Relays Option

This options provides alarms on the flow rate. Electro-mechanical relays are provided as an additional board that slots into the upper slot of the panel meter housing. The upper terminals are clearly numbered 13-28 to differentiate them from the lower terminals. See diagram “M” on page 15. The relays are rated at 250VAC / 30VDC @ 2A. Both normally open and normally closed contacts are provided with each relay. Note that if Option 3023 Pulse output is NOT RECOMMENDED with electro-mechanical as these relays have a tendency for contact bounce. Rather use Option 3001-P.

Option 3002 — RS 485 Communications Option

See diagram “M” or “P” on page 15 for wiring connections. It is non-isolated.

Option 3003 — 0-20 / 4-20 mA Flow Rate Analog Output Option

This option is supplied as an additional board that slots in the top slot of the DPM housing. The upper terminals are clearly numbered 13-28 to differentiate them from the lower terminals. See diagram “M” or “P” on page 15 for wiring information. It is non-isolated.

Option 3004-P — Single Setpoint With Solid State Relay Option

This option provides one alarm on the flow rate. A solid state relay is provided on the motherboard (lower terminals). See connection diagram on page 7 for wiring information.

Note that if Option 3023 Pulse output is ordered, alarm #1 relay no longer operates as a relay, but changes function to a pulsing relay for remote totalisation. If one alarm is still required with remote totalisation, then order the 2 alarm option (see Option 3001-P). Solid state relays are bounce free.

Option 3004-M — Single Setpoint With Mechanical Relay Option

This options provides one alarm on the flow rate. An electro-mechanical relay is provided as an additional board that slots into the upper slot of the panel meter housing. The upper terminals are clearly numbered 13-28 to differentiate them from the lower terminals. See diagram “M” on page 15. The relays are rated at 250VAC / 30VDC @ 2A. Both normally open and normally closed contacts are provided with each relay. See diagram in Option 3001-M for connection details for 1 alarm relay.

Option 3007 — 0 - 10V Analog Output Option

This option is supplied as an additional board that slots in the top slot of the DPM housing. The upper terminals are clearly numbered 13-28 to differentiate them from the lower terminals. See diagram “M” or “P” on page 15 for wiring information. It is non-isolated.

Option 3009 — Parallel BCD Output Option

This option is supplied as an additional slot in card in the top part of the DPM housing. See attached additional information when this option is ordered.

Option 3012 Peak or Valley Hold Option

This option displays and holds the maximum or minimum value (not both) of the flow rate. This option is activated in the programming menu “Opt” by selecting whether “Hold” should be “On” or “Off”, & choosing whether valley (”valy” = “On”) or peak (”valy” = “Off”) hold should be shown.

The display can be toggled to show the peak / valley value or normal value by toggling the “up” arrow key (press for about 3 seconds each time). For rapid response to step changes on the input, ensure that the filter in the programming menu is set to 0.0. To reset the peak / valley hold value, press the “side” arrow key for 3 seconds, or use an external potential free contact (see page 7 for connection details). If analog output option is fitted, the output will hold as well.

Option 3013 RS 232 Communications Option

See diagram “M” or “P” below for wiring connections. It is non-isolated.

Option 3017-P Three Setpoints With Solid State Relays Option

This option provides three alarms on the flow rate. Solid state relays are provided as an option board that slots into the upper slot of the panel meter box. The upper terminals are clearly numbered 13-28 to differentiate them from the lower terminals. The relays are rated at 400V 0.5A. If the panel meter loses power, the relays revert to a normally open condition. Visual LED alarm indication is provided for alarm 1 and 2 only. See diagram “P” below for wiring connections.
Note that if Option 3023 Pulse output is ordered, alarm #1 relay no longer operates as a relay, but changes function to a pulsing relay for remote totalisation. If three alarms are still required with remote totalisation, then order 4 alarm option (Option 3018-P). Solid state relays are bounce free.

Option 3018-P Four Setpoints With Solid State Relays Option

This option provides four alarms on the flow rate. Solid state relays are provided as an option board that slots into the upper slot of the panel meter box. The upper terminals are clearly numbered 13-28 to differentiate them from the lower terminals. The relays are rated at 400V 0.5A. If the panel meter loses power, the relays revert to a normally open condition. See diagram “P” below for wiring.
Note that if Option 3023 Pulse output is ordered, alarm #1 relay no longer operates as a relay, but changes function to a pulsing relay for remote totalisation. Solid state relays are bounce free.

Option 3023 Pulse Output For Remote Totalisation

This option provides a pulsing contact out on alarm #1 relay for remote totalisation. A solid state relay is used to eliminate contact bounce. The relay will pulse every time the totaliser display increments by one count However, the maximum relay pulsing rate is limited to 2 pulses per second. To ensure that this limit is not exceeded, the totaliser "FACT" factor must be set so that the totaliser display only increments by a maximum of two counts per second.
If no alarms options have been ordered with this option, then connect wiring as per diagram on page 7. If alarms have been ordered, then use diagram “P” below and use alarm 1 for remote totalisation.

Diagram “P”

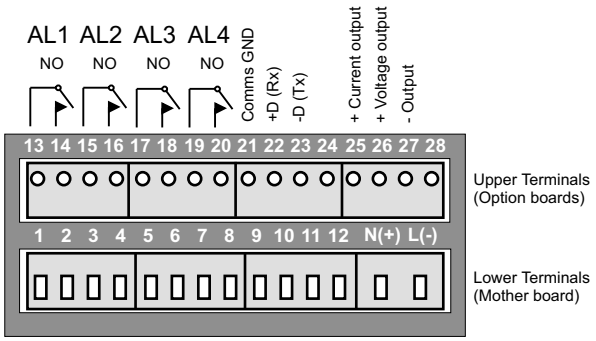

Diagram “M”

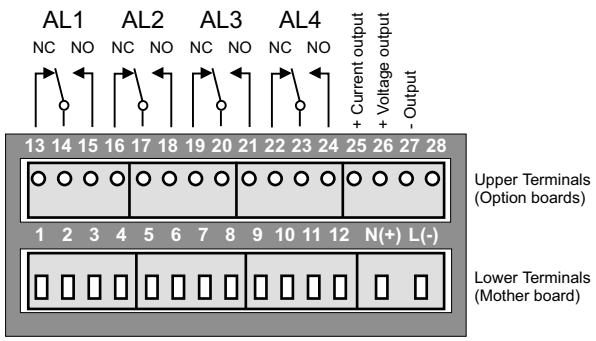

DOCUMENTATION CONTROL

Rev 0	Prototype release.
Rev 0.1	Front pic updated. Diagrams more readable. Settings page included. Spelling.
Rev 1	Production release. Improved features & menus. New options. Contents page.
Rev 1.1	Terminal layout. Terminology. Options. Specifications reviewed.
Rev 1.2	Programming page update & corrections. Encoder link configuration.
Rev 1.3 to 1.5	International layout.

DECLARATION OF CONFORMITY

Belt Weigher

Manufacturer: DPM

Type : 5013
Options : 3000 to 3026

Corresponds to the requirements of the following EC directives:

EMC directive	: 89/336/EEC
Low voltage directive	: 73/23/EEC
The applicable harmonised standards are	: EN 50081-1
	: EN 50082-1
	: EN 61010

USER NOTES & SETTINGS

Loadcell sensitivity:

Loadcell decimal point:

Loadcell zero / tare value:

Loadcell full scale value:

Pulley circumference:

Encoder pulse/rev:

Weigh-section length:

Totaliser setting:

Totaliser factor: